NB-IOT MODEM
WITH 4-20 MA INTERFACE
VEGA NB-12

USER MANUAL

DOCUMENT REVISION	FIRMWARE VERSION
07	2.1

www.vega-absolute.ru

CONTENTS

INTRODUCTION 3
1 DEVICE PURPOSE AND OPERATION PRINCIPAL 4
Device Purpose 4
Operation Algorithm 4
Functional 5
Marking 5
2 SPECIFICATION 6
Device Specification 6
Default Device Settings 7
3 OPERATION 8
Device Appearance 8
Contacts 10
Pulse Inputs Settings 11
Hall Sensor 13
Buttons 14
Indication 15
Mounting Recomendations 16
4 COMMUNICATION PROTOCOL 18
Vega NB-12 modem transmits the following types of packets 18
Vega NB-12 modem receives packets of the following types 20
5 STORAGE AND TRANSPORTATION REQUIREMENTS 24
6 CONTENT OF THE PACKAGE 25
7 WARRANTY 26

INTRODUCTION

This manual is designated for Vega NB-12 modem with 4-20 mA interface (hereinafter – the modem) manufactured by Vega-Absolute OOO and provides information on powering and activation procedure, control commands and functions of the modem.

This manual is targeted at specialists familiar with installation work fundamentals of electronic and electrical equipment.

Vega-Absolute OOO reserves the right to make changes to the manual related to the improvement of equipment and software, as well as to eliminate typos and inaccuracies, without prior notice.

1 DEVICE PURPOSE AND OPERATION PRINCIPAL

DEVICE PURPOSE

Vega NB-12 modem is designed for collecting readings from devices with current loop interface 4-20 mA, with analog output, pulse output or 1-Wire interface, further accumulating and transmitting of this information in NB-IoT network.

In addition, Vega NB-12 can be used as a security device – two additional inputs operate in security mode, there is also Hall sensor.

The modem can be used for any sensors and industrial equipment with interface 4-20 mA or 1-Wire such as temperature sensors, humidity sensors, pressure sensors.

Equipment with NAMUR pulse output is not supported

The modem may be powered by one or two batteries with capacity 6400 mAh.

Long-term storage of equipment outside the operating mode leads to battery passivation, which does not allow the equipment to operate in the declared mode.
For correct operation, before starting the equipment, carry out the depassivation process. To request the instructions please e-mail us support@vega-absolute.ru

OPERATION ALGORITHM

The readings collecting from the meter with a configurable schedule. The readings stored in the device memory and transmitting during the next communication session with the NB-IoT network.

Data are transferred with a configurable schedule too. Data can be transferred in random point in time during set period or in the set time. At the next communication session, the device starts sending accumulated packets with readings, from the earliest to the latest.

The device operates with confirmation all the time and send the next packet only after receiving a confirmation of the delivery of the previous one. If such confirmation was not received, NB-12 completes the communication session until the next one according to the schedule. Herewith, the device continues to collect data according to the data collection period and store it in memory. Non-transmitted packets remain in the device memory until the next communication session.

The internal clock is set automatically when device connected to the "Vega NB-IoT Configurator" via USB.

FUNCTIONAL

Vega NB-12 modem has the following features:

- Interface 'current loop' 4-20 mA
- Interface 1-Wire for connecting temperature sensors (up to 10 pc)
- Analog input for voltage measurement from 0 to 3 V
- Two inputs operating in the «security» mode for connecting the external leakage and safety sensors, etc. with ability to configure as pulse to count input pulses
- Queue of sending when delivery is not possible
- Time referencing of readings by internal clock (UTC)
- Extra communication when current on the 'current loop' interface is out of specified thresholds
- Communication in case of security inputs or Hall sensor actuation
- Measurement of temperature inside housing by built-in sensor
- Charge measuring of the battery (%)
- Ability to filter the pulses by the duration
- Extra communication when the thresholds for impulses are exceeded
- Extra communication for thresholds of temperature 1-wire sensors

MARKING

Device marked with sticker that contain the following information:

- Device model;
- IMEI;
- Month and year of manufacture.

Sticker located in three places – on device case, in factory certificate and on the packing box.

2 SPECIFICATION

DEVICE SPECIFICATION

MAIN	
Analog inputs	1
Interfaces	1-Wire, current loop 4-20 mA
Security/pulse inputs	2
USB-port	micro-USB, type B
Operating temperatures	-40...+85 °C
Built-in temperature sensor	yes
Hall sensor	yes
Quantity of black box records	up to 100 000
CELLULAR COMMUNICATIONS	
Supported Cellular Standards	LTE Cat NB1
Data transfer protocol	MQTT
Battery Life	1 year if the data transferring once a day
LTE NB-IoT antenna type	external
POWER	
Built-in battery	6400 mAh (one or two, depending on delivery conditions)
CASE	
Housing dimensions	96 x 96 x 50 mm
Ingress protection rating	IP67
PACKAGE	
Dimensions	165 x 118 x 57 mm
Weight	0.350 kg

DEFAULT DEVICE SETTINGS

PARAMETER	VALUE
Confirmed Uplinks	OFF
Communication period	24 hours
Data collection period	24 hours
Time zone	UTC +00:00
Inputs mode	impulse
Hall sensor	ON
Send network statistics	OFF
Pulse filtering settings	50 ms for pulse and pause

For changing the device settings, you need to connect to it with "Vega NB-IoT Configurator" application. You can download app on the iotvega.com site in SOFT section as well as User Manual for configurator. Go to the app page.

3 OPERATION

DEVICE APPEARANCE

Vega NB-12 is represented in gray plastic case which has six screws and mounting for DIN-rail. The device case is equipped with a hermetic gland of M12 size. A sealant is installed inside the gland, ensuring compliance with the declared Ingress Protection rating of the device case.

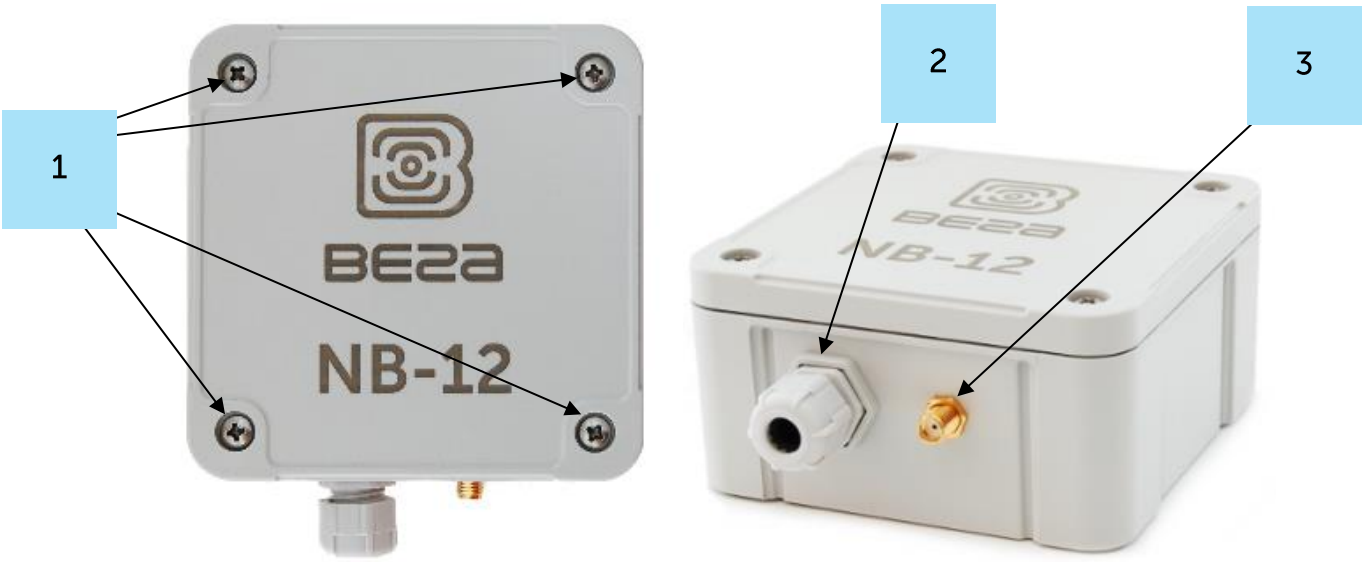

1 – screw ø 4 mm x 27 mm, cross ⊕

2 – cable gland of M12 size for installing the cables and wires with circular cross-section with a diameter of 5...6 mm

3 – input of external antenna

Internal structure of cable gland

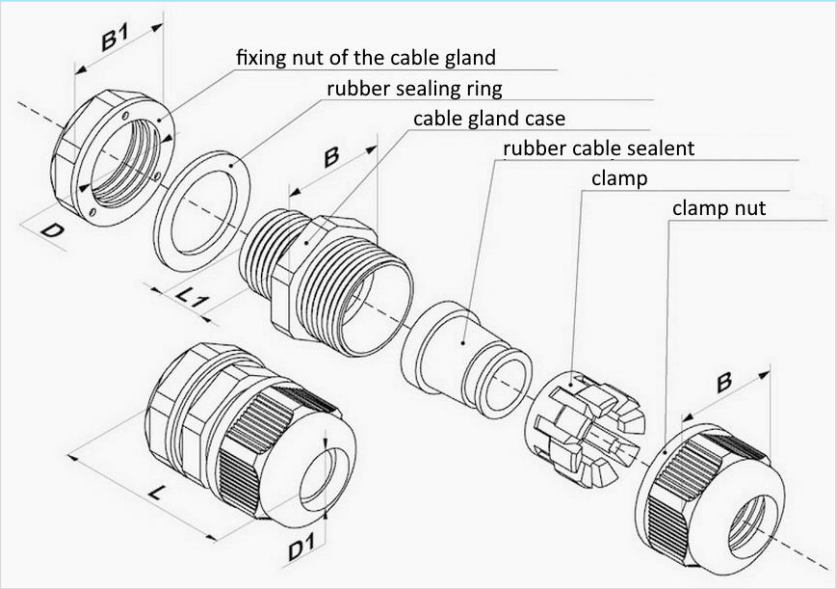

All of elements for manage and indication as well as connecting contacts are placed on the board inside the case.

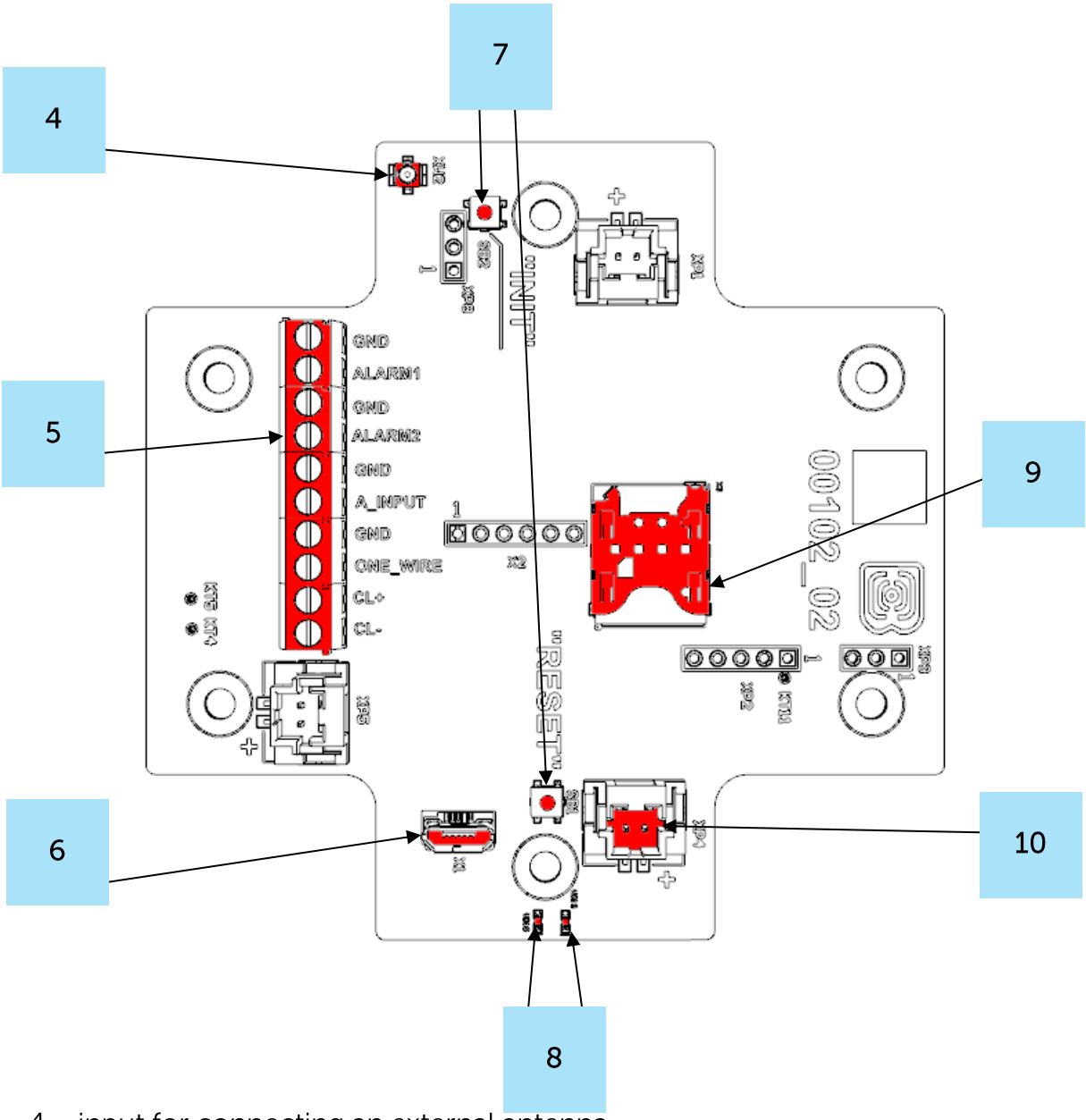

4 – input for connecting an external antenna

5 – contacts

6 – USB-port

7 – manage buttons

8 –LED indicators

9 – SIM holder

10 – input for connecting a battery

CONTACTS

Description of contacts assignment is in table below. When connecting a radio modem to external devices with pulse outputs, consider the circuit design of its pulse inputs.

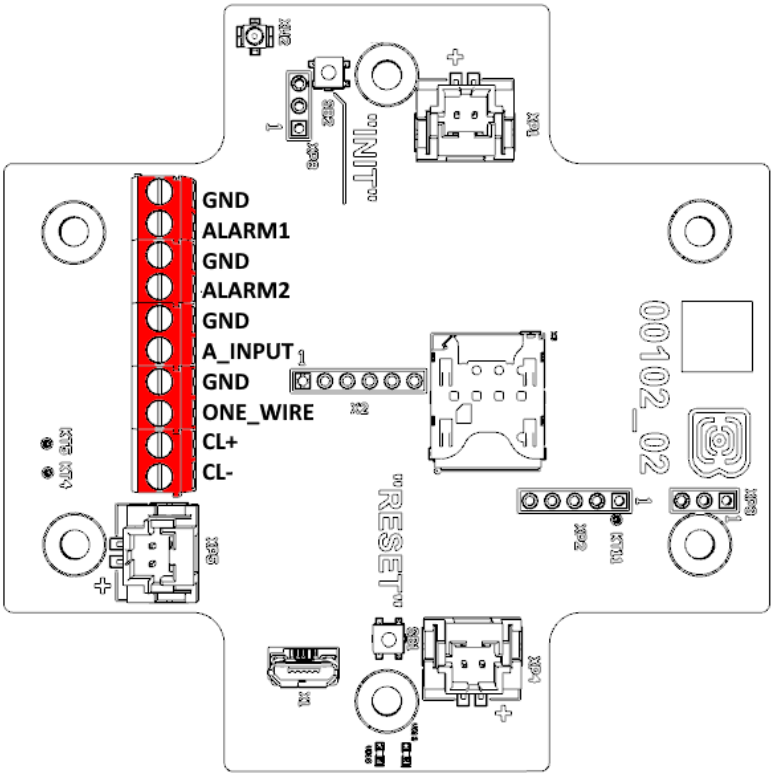

Circuit design of the pulse inputs

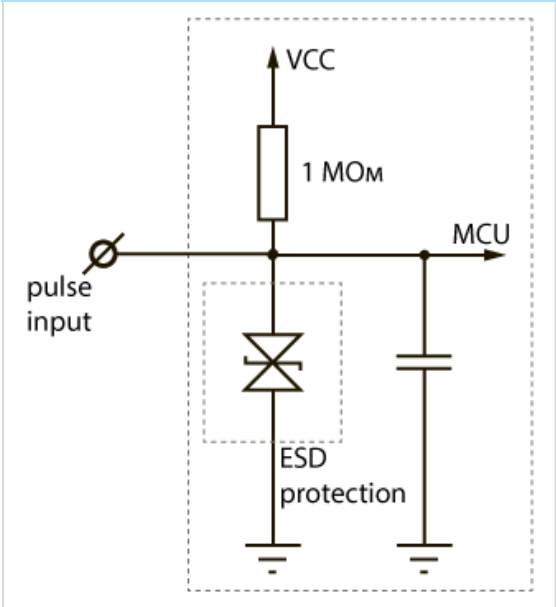

Contact	PCB designation	Description
1	GND	Ground
2	ALARM1	Security/pulse input 1
3	GND	Ground
4	ALARM2	Security/pulse input 2
5	GND	Ground
6	A_INPUT	Analog input
7	GND	Ground
8	ONE_WIRE	1-Wire
9	CL+	4-20 mA «+»
10	CL-	4-20 mA «-»

There are two security inputs on the boars which allows to connect circuits with the following types of NO contacts:

- reed switch;
- mechanical pushbutton;
- open-collector output.

The device monitors status changes on the security inputs and when the security input triggers, the device is activated and sends an alarm message to the network. The trigger mechanism is configured through the program "Vega NB-IoT Configurator".

Security inputs can operate as pulse.

Equipment with NAMUR pulse output is not supported

CL+ and CL- contacts are used for connecting an external sensor with 4-20 mA interface. Scheme for connecting is shown on the picture below.

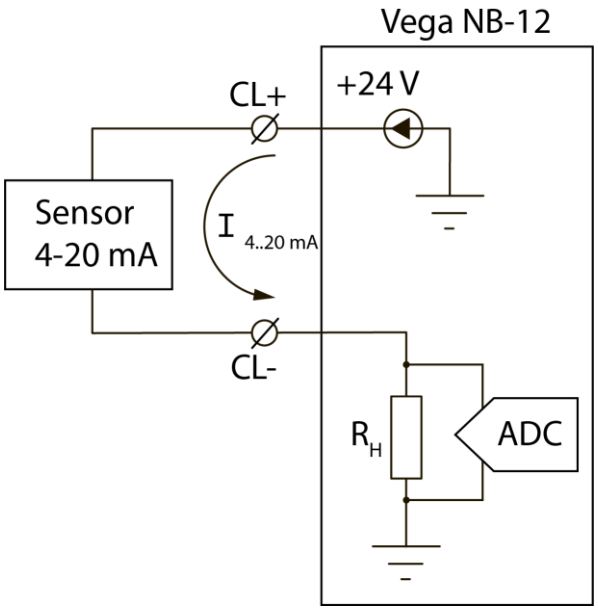

PULSE INPUTS SETTINGS

When you connect the modem to metering devices with a pulse output, it is necessary to consider the features of the pulse of a specific type of metering device: bounce, minimum pulse and pause duration. To do this, it is necessary to record the characteristics of the pulse with an oscilloscope or obtain information from the manufacturer of the meter.

The modem has a special software pulse filter. The filter is represented by two settings for each pulse input (see section 4, “Settings” tab). Consider the features of filtering settings for different pulse outputs.

1) Mechanical pulse output

Usually, the mechanical pulse output in metering devices is implemented on a reed switch, but it can also be a button or other mechanics. The main problem with such outputs is contact bounce. At a moment of falling and rising, there are many additional impulses that need to be no considered in the calculation. In addition, the pulse duration floats and depends on the current flow rate of the meter. For correct counting, it is necessary to determine the

minimum useful pulse duration and the minimum pause between useful pulses (all that is less is bounce). The obtained values must be set in the modem settings.

The minimum useful pulse duration is the pulse duration that the meter produces at the maximum flow rate (the maximum flow rate is indicated in the meter's passport). This duration does not include bounce time. The minimum pause duration can be set equal to the minimum pulse width, or longer if necessary. Usually, the pause between pulses is an order of magnitude higher.

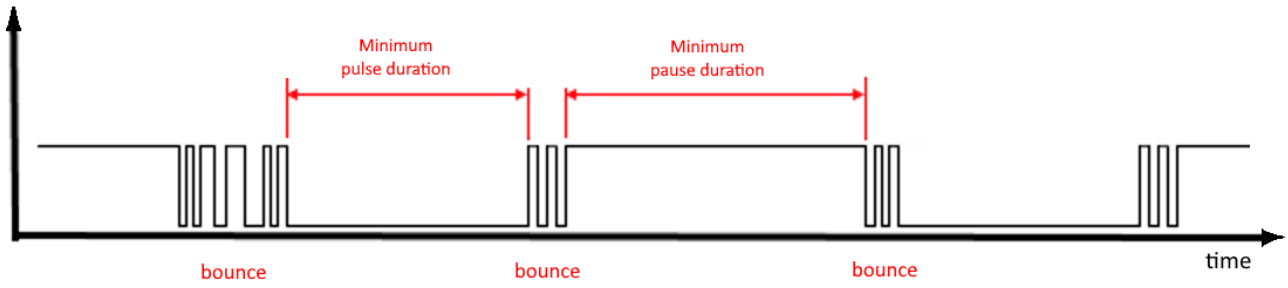

2) 2) Electronic pulse output

The electronic pulse output has no bounce (open collector output). This output usually has a fixed pulse width. For the modem to fix the pulse, it is necessary to set in the settings the minimum pulse duration less than the actual pulse duration issued by the meter.

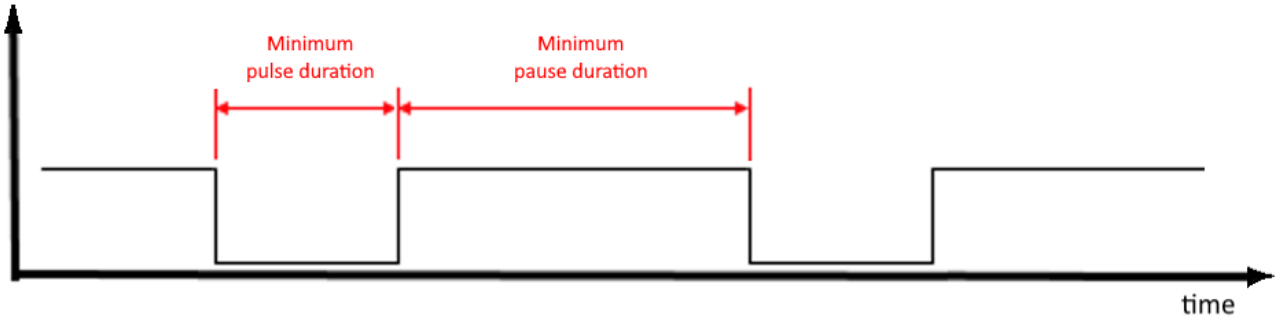

HALL SENSOR

The device has Hall sensor which located on the board edge on the bottom side. When the magnet is brought up the sensor triggered, and the device can form the alarm message which immediately transmitted to the server.

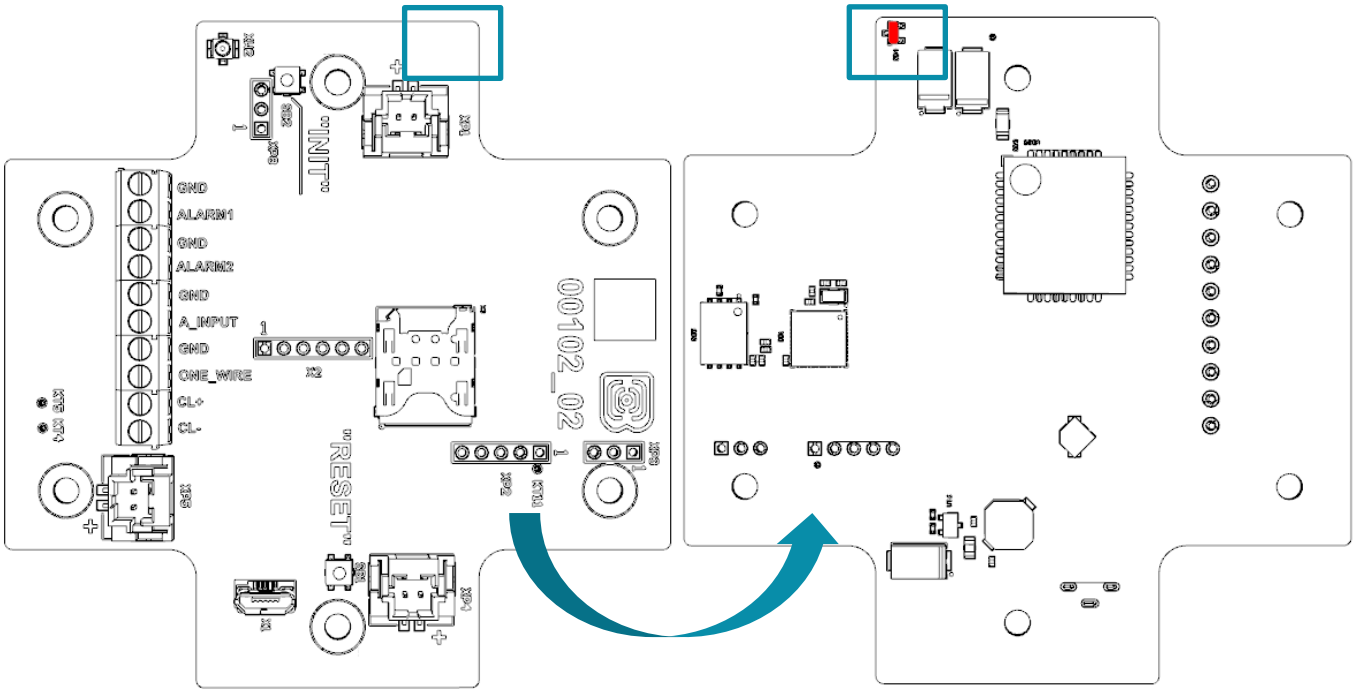

BUTTONS

There are two buttons on the board which can help you to manage the device. Buttons are described in the table below.

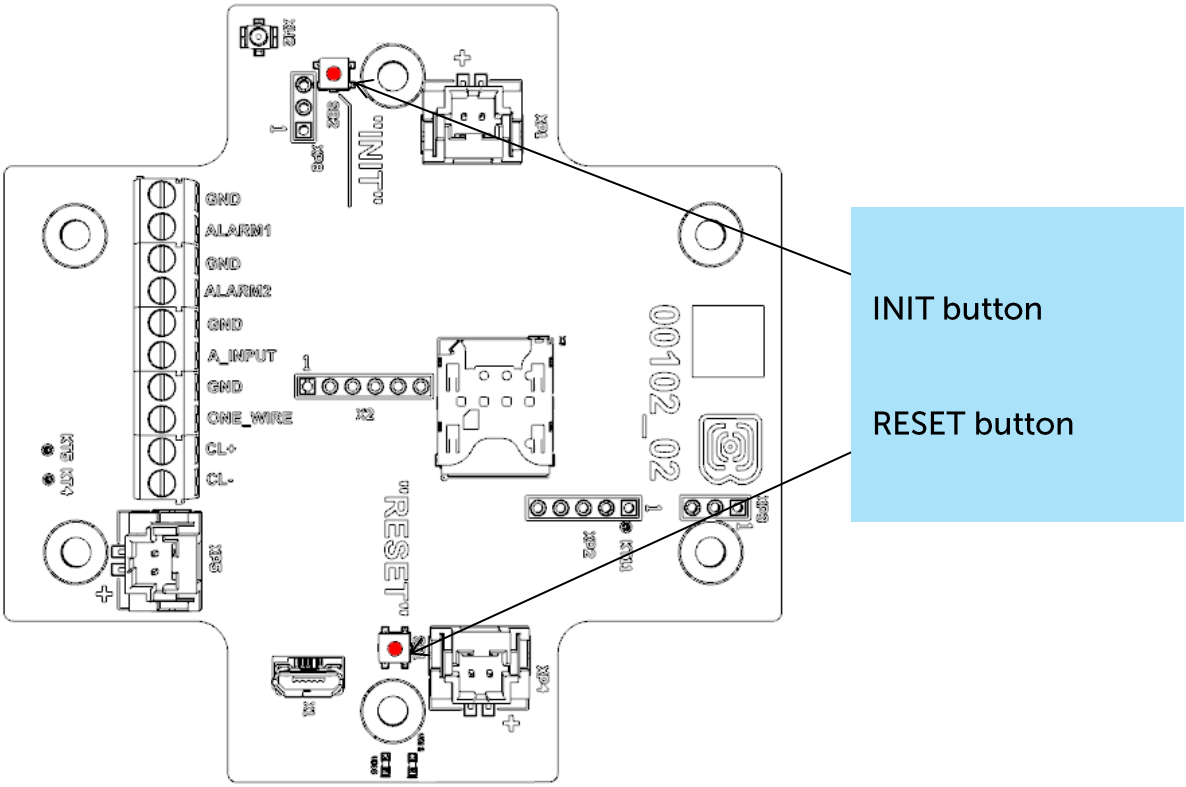

RESET	
Short pressing	Device reloading
INIT	
Pressing for 1 second	Registration at the network
Pressing for 2 seconds	Data transmitting
Pressing for 3 seconds	LTE-modem switching off
Pressing for 4 seconds	To form record to the black box

When you hold down the button, the red LED starts flashing once a second, which will help you to find out the duration of pressing. Pressing for 1 second corresponds to one flash of the LED, pressing for 2 seconds corresponds to two and so on.

INDICATION

There are two LEDs on the board: red and blue. Blue LED VD19 shows LTE-modem state, and red LED VD18 – the device state.

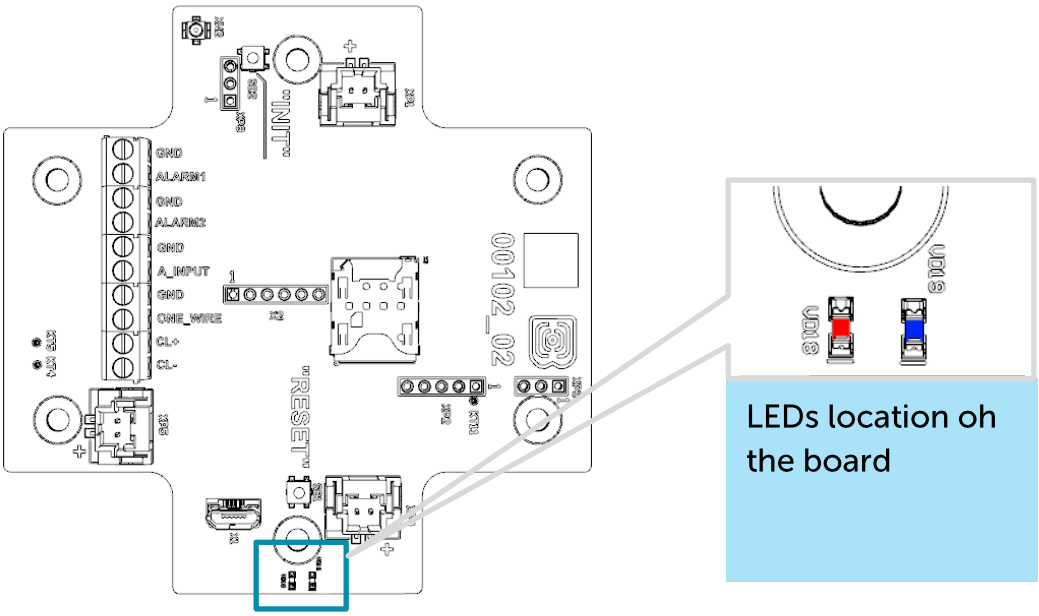

LTE-modem		
	Short flash every three seconds	Device search the network
	Short flash every second	Device successfully registered and it is in the network
	Two short flashes every one second	Device transmits data to the network
	No light	LTE-modem switched off
Device		
	Short flash every second	Battery charge is lower than 5%
	Short flash every five seconds	Device in the 'Operation' mode
	No light	Device in the 'Sleep' mode or switched off

MOUNTING RECOMENDATIONS

The counter shall be installed and adjusted by qualified specialists to ensure proper operation of the device.

When connecting the pulse output of the metering device to the counting input of the modem, it is recommended to use cables with a shielding braid, and to install the metering device with the modem away from sources of radio interference. It is recommended to use a two-wire shielded cable. The shield is connected on the side of the impulse counter to its ground.

1st wire – signal from pulse output is connecting to contact COUNT

2nd wire – ground is connecting to contact GND

Shield – is connecting to contact GND

Before starting mounting work, you must make sure that the latest firmware version is installed on the equipment

For mounting you will need:

- SIM-card;
- cross-shaped screwdriver ⊕;
- wire stripper;
- laptop.

Step by step mounting be like:

1. Installing SIM-card into holder;
2. Setting the device through the "Vega NB-IoT Configurator" – the first and second steps are usually carried out in the office.
3. De-energizing the connected equipment, metering devices, etc.
4. Placement the wires in the cable gland. It must be remembered that the wires must be united in one cable of circular cross-section with diameter of 5...6 mm.

Inside the cable gland there is a sealant ensuring compliance with the declared Ingress Protection rating of the device case. When removing the sealant, as well as when installing wires of a different diameter or cross-section, device performance may deteriorate until failure due to moisture entering the case

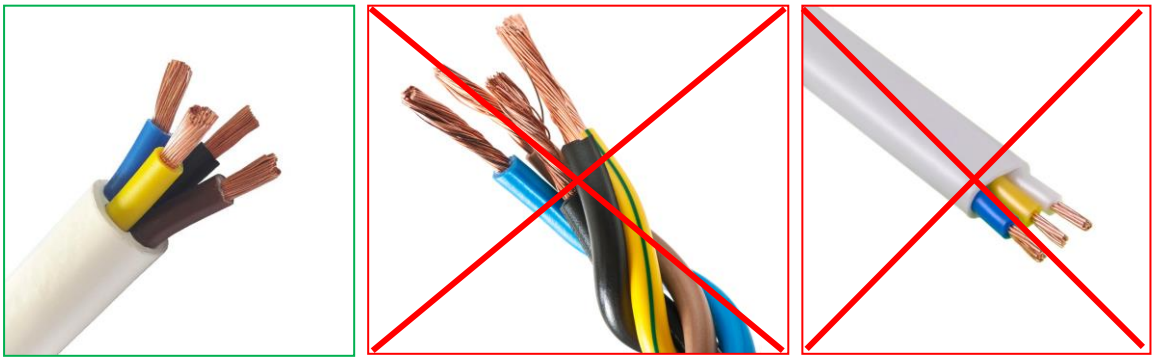

5. Connecting all necessary wires to the contacts.
6. Connecting the battery at the connector. After the battery connection the device loads and comes to sleep until the next communication session.

Location of the SIM slot on the board (if there is)

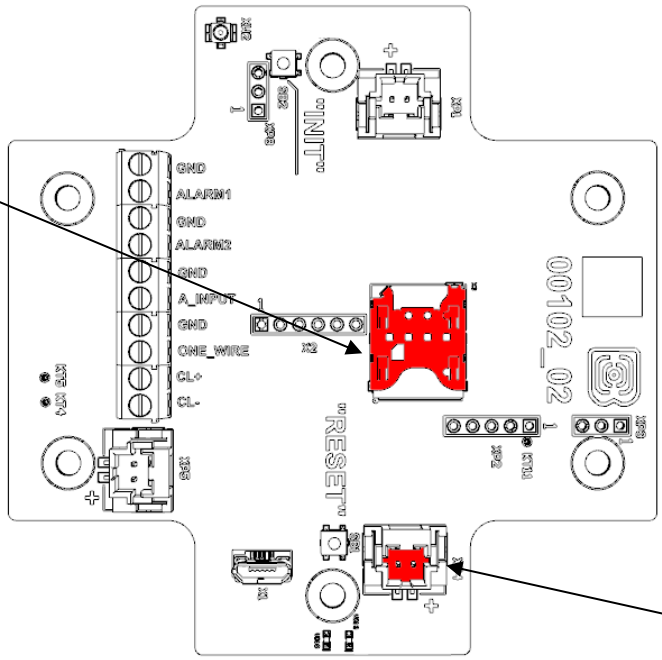

Location of the battery connectors on the board

7. If you need to test the data transmitting, then press and hold the INIT button for the 2 seconds.
8. Before assembling the device, you can reset the pulses accumulated during testing and connection through the "Vega NB-IoT Configurator" if it is necessary.
9. Assembling the device.

4 COMMUNICATION PROTOCOL

VEGA NB-12 MODEM TRANSMITS THE FOLLOWING TYPES OF PACKETS

Data is transmitted via MQTT protocol. You should specify in the device settings the address and port of the server where the data will be sent. Those settings specified in application "Vega NB-IoT Configurator". It must be MQTT broker as a server (received side). You should specify in the device settings the address and port of the broker. Also, you should specify a topic name where the data published and a client name – the name which the device use for publishing. All those settings specified in "Vega NB-IoT Configurator" in part "MQTT settings". For watching the data sending by the device you should deploy MQTT broker on a PC and become subscribed on MQTT broker with any application.

Vega NB-12 sends the message on the server as a text of JSON format. See example below.


```
{
"Message": {
   "dev":"NB-12 v2.1",
   "IMEI":"867723030031586",
   "IMSI":"250990283154717",
   "ICCID":"8970199170383722111",
   "num":4477,
   "UTC":1663824996
},
  "CellStatus": {
   "SQ":20,
   "EARFCN":1266,
   "PCID":304,
   "RSRP":-801,
   "RSRQ":-108,
   "RSSI":-736,
   "SNR":129
},
  "Telemetry": {
   "reason":"time",
   "UTC": 1638768606,
   "bat": 99,
   "temp": 27,3
   "ADC1": 1609,
   "current": 26.28,
   "bat_drop": 3.19,
   "pulse1":{"C":45572,"H":0,"L":0},
   "pulse2":{"C":45464,"H":0,"L":0},
   "ow1":{"t":26.4,"H":0},
   "ow2":{"t":26.3,"H":0},
   "ow3":{"t":26.4,"H":0},
```

```
"States": {
  "I1":1,
  "I2":1,
  "M":0,
  "COVR":1,
  "BDE":0}}}
```


Transcription of the message fields:

Message – part with information about current message.

dev – name and version of the device firmware
IMEI – LTE-modem identifier
IMSI, ICCID – SIM-card (SIM-chip) identifiers
num – the number of the message
UTC – the date and the time of message sending in UTC format by Greenwich

CellStatus – part with information about the cellular state

SQ – gateway signal quality
EARFCN – the number of radio frequency channel (absolute)
PCID – physical network address
RSRP – input signal power
RSRQ – input signal quality
RSSI – indicator of the input signal power
SNR – signal to noise ratio

Telemetry – part with collected data (one packet)

reason – reason for packet forming*
UTC – the date and the time of message collecting in UTC format by Greenwich
bat – battery charge, %
temp – processor temperature
ADC1 – voltage on the input A_INPUT
current – measured current of the current loop interface
bat_drop – battery voltage value under load
pulse1 – pulse number on the input 1
pulse2 – pulse number on the input 2
C – pulse quantity
H – higher than the specified number of pulses per period (0 - no threshold exceeded, 1 - exceeded)
L – lower than the specified number of pulses per period (0 - no threshold exceeded, 1 - exceeded)
ow1 – values of temperatures of sensors on 1-Wire bus (first field "1", "2" etc. – sensor number, second field "t" - sensor temperature value, third field "s" – threshold exceeding flag ("0" – no exceeding, "1" - thresholds exceeded))

* Possible values for **Reason** field (Reason for packet forming):

time - packet formed by the time (data collection period set up in the Configurator for the device)

alarm1 - packet formed by the alarm on the input "COUNT1" (communication session initiated by this event)

alarm2 - packet formed by the alarm on the input "COUNT2" (communication session initiated by this event)

cnfg - packet formed by the command from Configurator

hall sensor - packet formed by the Hall sensor (communication session initiated by this event)

button - packet formed by the button pressing (communication session initiated by this event)

pulse limit - the packet was formed by an alarm, since the number of pulses exceeds the set thresholds

ow limit - packet generated by onewire alarm because temperature exceeds set thresholds

settings_change - confirmation of delivery of the package with settings (the checkbox "Send confirmation to the server about changing device settings" must be checked)

States – section contains information about the status of inputs

I – Input+input number - input state: 0 - logical zero at the input, 1 - logical one at the input

M -magnet – the presence of an external magnetic field, where "0" - absent, "1" - present.

COVR – flag for exceeding the current limits of the current loop interface specified in the settings ("0" - the limit is not exceeded, "1" - the limit is exceeded)

BDE - flag of the presence of a critical voltage drop of the battery under load

VEGA NB-12 MODEM RECEIVES PACKETS OF THE FOLLOWING TYPES

Vega NB-12 receives the message from the server as a text of JSON format. See example below.

```
{
"inputConfig": {
using inputs as impulse
   "mode1":"pulse",
   "mode2":"pulse"}
setting the inputs as security, for closing
   {"edge1":"short",
   "edge2":"short",
   "mode1":"guard",
   "mode2":"guard"}
setting the inputs as security, for opening
   {"edge1":"open",
   "edge2":"open",
   "mode1":"guard",
```

"mode2":"guard"}

setting the inputs as security, for closing and opening

{"edge1":"both",
"edge2":"both",
"mode1":"guard",
"mode2":"guard"}

"pulseFilter":{
"FH1":100,
"FH2":100,
"FL1":50,
"FL2":50},

"pulseTreshold":{
"EH1":false,
"EH2":false,
"EL1":true,
"EL2":true,
"TL1":5,
"TL2":5,
"WL1":"5m",
"WL2":"5m"},

"network": {
"QoS":2,
"retain":true,
"stat":true},

"oneWire": {
"owEn":true,
“owM1":"thr",
"owH1":30,
"owL1":0,
"owD1":3},

"schedule":{
"c_type":"hourly",
"c_5min":[0,5,10,15,20,25,30,35,40,45,50,55],
"t_type":"daily",
"t_hours":[6,18],
"t_attempt":3,
"t_pause":15,
"tz":"+07:00"},

"sensor":{
"curEn":true,
"curEA": true,

"curH":20,
"curL":2,
"halE":true,
"warmUp":5},

"version":1}

inputConfig – section contains information on setting up counting inputs

mode1 – input 1 mode ("pulse" - pulse, "guard" - security)

mode2 – input 2 mode ("pulse" - pulse, "guard" - security)

edge1 – signal edge for input 1, on which operation should occur ("short" - on closing, "open" - on opening, "both" - both).

edge2 – signal edge for input 2, on which operation should occur ("short" - on closing, "open" - on opening, "both" - both).

pulseFilter – the section contains information about setting the pulse filtering

FH1 – minimum duration of the pause between pulses at input 1

FH2 – minimum duration of the pause between pulses at input 2

FL1 – minimum pulse length at input 1

FL2 – minimum pulse length at input 2

pulseTreshold – the section contains information on setting the pulse thresholds

EH1 – enable. upper threshold for input 1 ("true" – enabled, "false" - disabled)

EL1 – enable lower threshold for input 1 ("true" – enabled, "false" - disabled)

WH1 – time interval for input 1, during which the threshold number of pulses for the upper threshold is expected (from 5 minutes to 24 hours).

WL1 – time interval for input 1 during which the threshold number of pulses for the lower threshold is expected (from 5 minutes to 24 hours).

TH1 – upper threshold for input 1 (maximum value 2147483647).

TL1 – lower threshold for input 1 (maximum value 2147483647).

network – network configuration

QoS – quality of service ("0" - the message is sent once without waiting for confirmation of delivery (minimum traffic), "1" - message delivery to the subscriber is guaranteed, there is a possibility of message duplication, "2" - message delivery to the subscriber is guaranteed and message duplication is excluded (maximum traffic)

retain – instructing the broker to store the last message for the subscriber, where: "true" - store, "false" - do not store.

stat - send network statistics, where "true" - send, "false" - do not send.

oneWire – 1-wire settings

owEn – enable 1-Wire interface ("true" - enabled, "false" - disabled)

owMx – threshold control mode ("thr" - threshold, "dif" - differential, "off" - threshold control is not set)

owHx – the value of the upper temperature threshold, when exceeded, the operation will occur (temperature in degrees Celsius, can take a value from -55 to 125).

owLx - the value of the lower temperature threshold, when exceeded, the operation will occur (temperature in degrees Celsius, can take a value from -55 to 125).

owDx - the value of the differential threshold, when exceeded, the operation will occur (in degrees Celsius, can take a value from -55 to 125).

owPP – polling period in minutes (step in 5 minutes, can take a value from -5 to 1275 minutes).

schedule – schedule settings

t_type – data transmission schedule type ("monthly" - monthly, "weekly" - weekly, "daily" - daily, "hourly" - hourly)

c_type – type of data collection schedule ("monthly" - monthly, "weekly" - weekly, "daily" - daily, "hourly" - hourly)

t_days – day of the month on which the data will be transferred (from 0 to 31, where 0 means the last day of the month)

c_days – day of the month on which the data will be collected (from 0 to 31, where 0 means the last day of the month)

t_wdays – day of the week on which the data will be transmitted (from 1 to 7)

c_wdays – the day of the week on which the data will be collected (from 1 to 7)

t_hours – hour at which the data will be transmitted (from 0 to 23)

c_hours – the hour at which the data will be collected (from 0 to 23)

t_attempt – the number of retries to transmit the packet in case of failure (from 1 to 255).

t_pause – pause time between attempts in minutes (from 1 to 65535).

t_rand – random transmission time during the day ("true" - enabled, "false" - disabled)

t_5min – data transfer time within an hour in steps of 5 minutes (from 0 to 55)

c_5min – time of data collection within an hour in steps of 5 minutes (from 0 to 55)

t_act – hour of sending data (from 1 to 12)

c_act – hour of data collection (from 1 to 12)

tz – timezone

sensor – sensor settings

halE – Hall sensor control ("true" - enabled, "false" - disabled)

curEn – 4-20 mA interface state ("true" - enabled, "false" - disabled).

curEA – immediately send data when the current goes beyond the thresholds ("true" - enabled, "false" - disabled).

curH – upper threshold (takes values from 2.00 to 25.00 mA).

curL - lower threshold (takes values from 2.00 to 25.00 mA).

warmUp – warm-up time (from 1 to 60 seconds).

If the schedule is **hourly**, or **daily** then "c_act", "t_act" and "t_rand" do not need to be added to the package, as well as specific days from another schedule (**monthly** or **weekly**).

5 STORAGE AND TRANSPORTATION REQUIREMENTS

Vega NB-12 modem with 4-20 mA interface shall be stored in the original packaging in heated room at temperatures +5 °C to +40 °C and relative humidity less than 85%.

The modem shall be transported in covered freight compartments of all types at any distance at temperatures -40 °C to +85 °C.

Long-term storage of the device in the “Storage” mode (more than 6 month) can lead to passivation of the battery.

6 CONTENT OF THE PACKAGE

The modem is delivered complete with:

Vega NB-12 modem with 4-20 mA interface – 1 pc.

Antenna – 1 pc.

Battery 6400 mAh – 1...2 pcs.[1]

Factory certificate – 1 pc.

[1] The quantity of batteries depending on delivery conditions

7 WARRANTY

The manufacturer guarantees that the product complies with the current technical documentation, subject to the storage, transportation and operation conditions specified in the "User Manual".

The warranty period is 36 months.

The warranty does not apply to batteries.

The warranty period of operation is calculated from the date of sale marked in the product factory certificate, and from the release date when such a mark is absent. During the warranty period, the manufacturer is obliged to provide repair services or replace a failed device or its components.

The manufacturer does not bear warranty obligations in the event of a product failure if:

- the product does not have a factory certificate;
- the factory certificate does not have an TCD stamp and / or there is no sticker with information about the device;
- the serial number (DevEUI, EMEI) printed on the product differs from the serial number (DevEUI, EMEI) specified in the factory certificate;
- the product has been subject to alterations in the design and / or software which are not provided for in the operational documentation;
- the product has mechanical, electrical and / or other damage and defects arising from violation of the conditions of transportation, storage and operation;
- the product has traces of repair outside the manufacturer's service center;
- the components of the product have internal damage caused by the ingress of foreign objects / liquids and / or natural disasters (flood, fire, etc.).

The average service life of the product is 7 years.

In the event of a warranty claim, contact the service center:

119A, Bol'shevistskaya Str., Novosibirsk, 630009, Russia.

Tel.: +7 (383) 206-41-35.

e-mail: remont@vega-absolute.ru

Document Information	
Title	NB-IoT modem with 4-20 mA interface Vega NB-12
Document type	Manual – Translation from Russian
Document number	V02-NB12-01
Revision and date	07 of 04 October 2022

Revision History

Revision	Date	Name	Comments
01	24.10.2019	KEV	The first release
02	14.07.2020	KEV	Minor changes
03	02.03.2021	KEV	New parts "Pulse inputs settings", "Mounting recommendations", we replace configurator screenshots, new function of the pulse filtering, now alarm inputs can operate in pulse mode, maximum number of batteries is two
04	08.12.2021	KMA	Changes in the communication protocol
05	21.01.2022	KMA	Planned revision
06	22.08.2022	KMA	Minor edits
07	04.10.2022	KMA	Changes in the communication protocol

vega-absolute.ru

User Manual © Vega-Absolute OOO 2019-2022